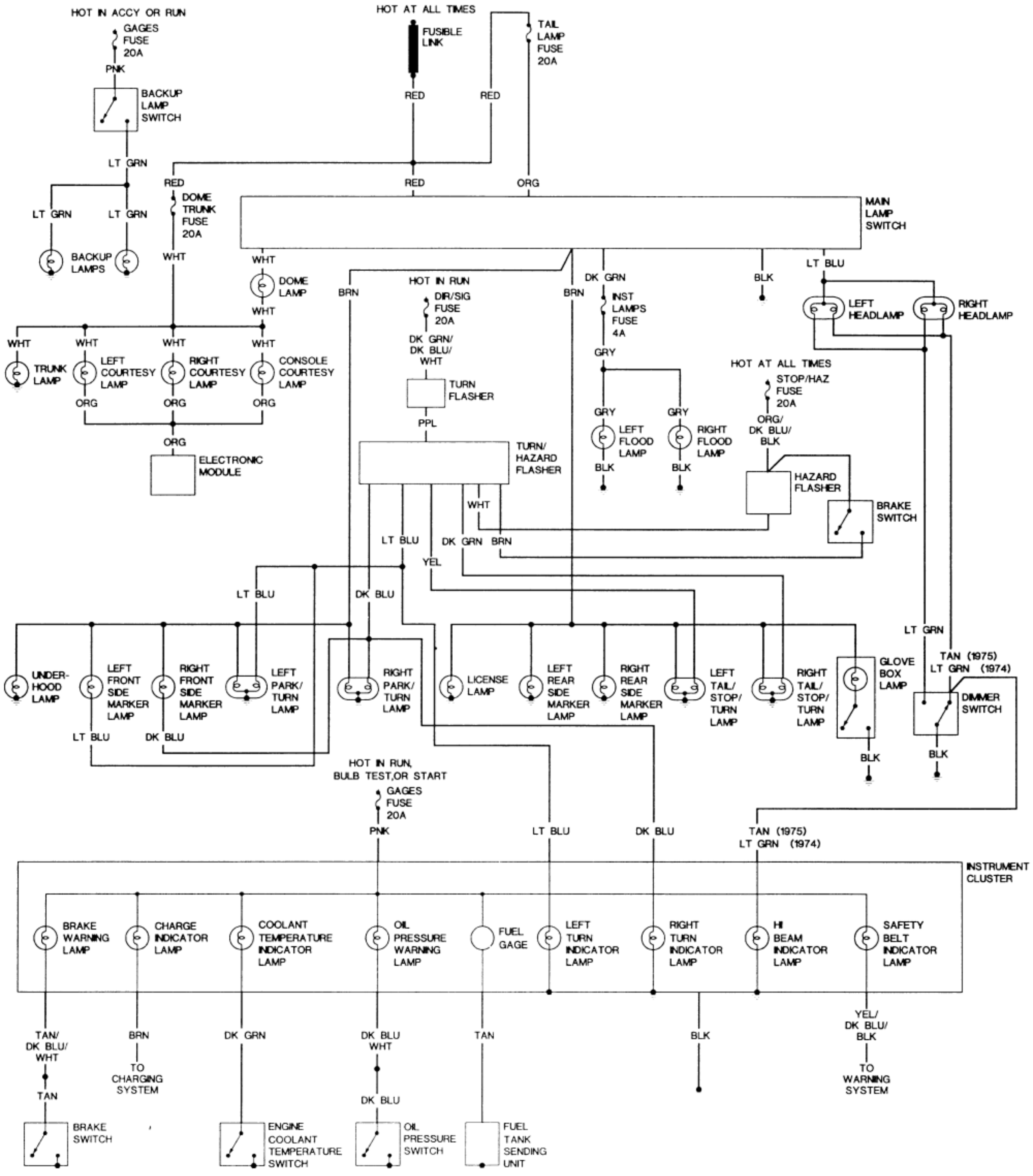
HOT IN ACCY OR RUN
GAGES FUSE 20A
PNK
BACKUP LAMP SWITCH
LT GRN
LT GRN
LT GRN
BACKUP LAMPS
HOT AT ALL TIMES
FUSIBLE LINK
TAIL LAMP FUSE 20A
RED
RED
RED
ORG
RED
DOME TRUNK FUSE 20A
WHT
MAIN LAMP SWITCH
WHT
DOME LAMP
WHT
BRN
HOT IN RUN
DIR/SIG FUSE 20A
DK GRN/ DK BLU/ WHT
DK BLU/ WHT
TURN FLASHER
PPL
TURN/ HAZARD FLASHER
BRN
DK GRN
INST LAMPS FUSE 4A
GRY
GRY
GRY
LEFT FLOOD LAMP
RIGHT FLOOD LAMP
BLK
BLK
BLK
LT BLU
LEFT HEADLAMP
RIGHT HEADLAMP
HOT AT ALL TIMES
STOP/HAZ FUSE 20A
ORG/ DK BLU/ BLK
HAZARD FLASHER
BRAKE SWITCH
WHT
WHT
WHT
WHT
TRUNK LAMP
LEFT COURTESY LAMP
RIGHT COURTESY LAMP
CONSOLE COURTESY LAMP
ORG
ORG
ORG
ORG
ELECTRONIC MODULE
WHT
LT BLU
DK GRN
BRN
YEL
LT BLU
DK BLU
LT GRN
UNDER-HOOD LAMP
LEFT FRONT SIDE MARKER LAMP
RIGHT FRONT SIDE MARKER LAMP
LEFT PARK/ TURN LAMP
RIGHT PARK/ TURN LAMP
LICENSE LAMP
LEFT REAR SIDE MARKER LAMP
RIGHT REAR SIDE MARKER LAMP
LEFT TAIL/ STOP/ TURN LAMP
RIGHT TAIL/ STOP/ TURN LAMP
GLOVE BOX LAMP
TAN (1975)
LT GRN (1974)
DIMMER SWITCH
LT BLU
DK BLU
BLK
BLK
HOT IN RUN, BULB TEST, OR START
GAGES FUSE 20A
PNK
LT BLU
DK BLU
TAN (1975)
LT GRN (1974)
INSTRUMENT CLUSTER
BRAKE WARNING LAMP
CHARGE INDICATOR LAMP
COOLANT TEMPERATURE INDICATOR LAMP
OIL PRESSURE WARNING LAMP
FUEL GAGE
LEFT TURN INDICATOR LAMP
RIGHT TURN INDICATOR LAMP
HI BEAM INDICATOR LAMP
SAFETY BELT INDICATOR LAMP
TAN/ DK BLU/ WHT
TAN
BRN
TO CHARGING SYSTEM
DK GRN
DK BLU WHT
DK BLU
TAN
BLK
YEL/ DK BLU/ BLK
TO WARNING SYSTEM
BRAKE SWITCH
ENGINE COOLANT TEMPERATURE SWITCH
OIL PRESSURE SWITCH
FUEL TANK SENDING UNIT