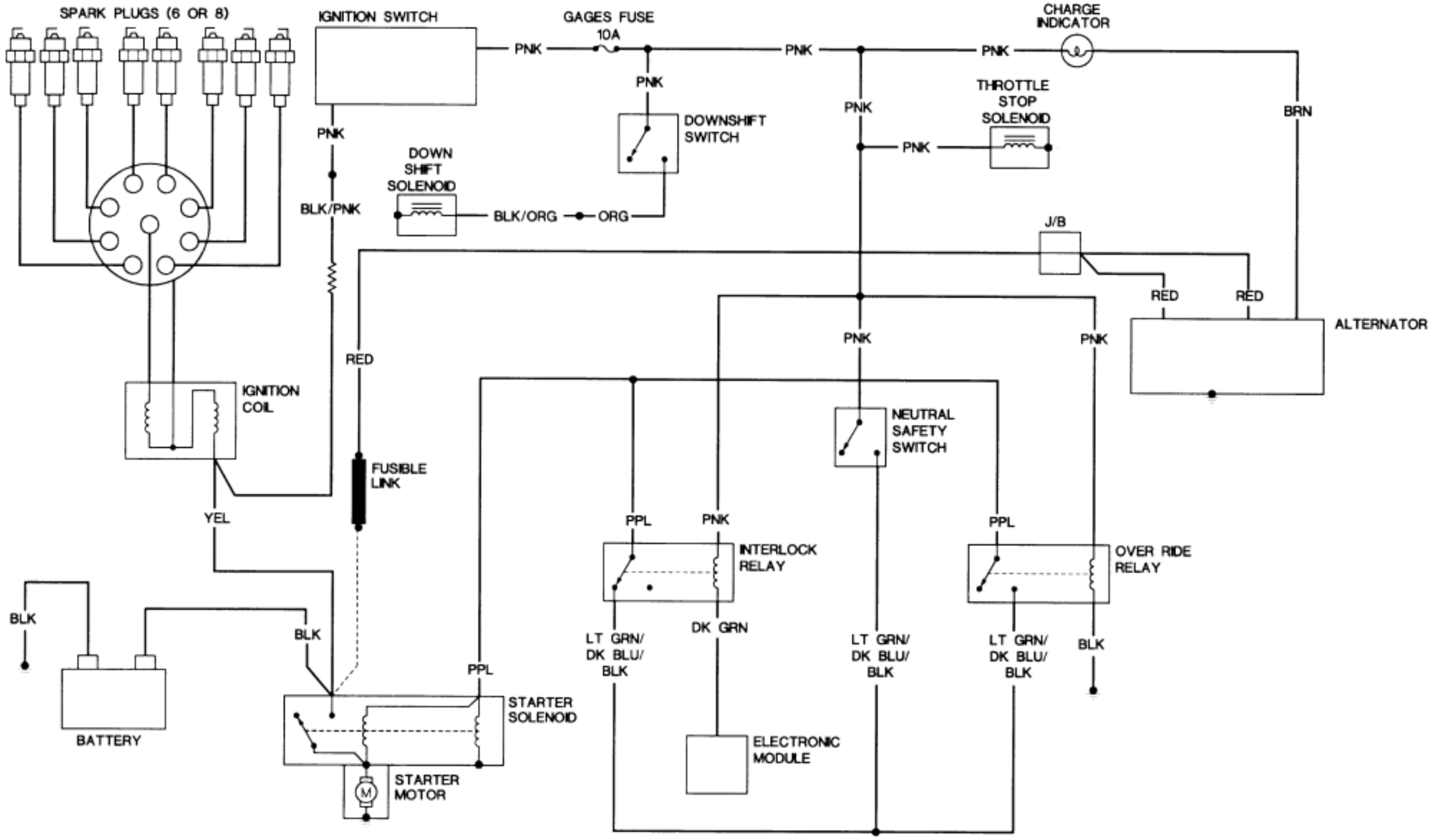
SPARK PLUGS (6 OR 8)
IGNITION SWITCH
GAGES FUSE
10A
CHARGE
INDICATOR
PNK
PNK
PNK
PNK
PNK
PNK
THROTTLE
STOP
SOLENOID
BRN
DOWNSHIFT
SWITCH
DOWN
SHIFT
SOLENOID
BLK/PNK
BLK/ORG
ORG
J/B
RED
RED
ALTERNATOR
PNK
PNK
RED
IGNITION
COIL
NEUTRAL
SAFETY
SWITCH
FUSIBLE
LINK
YEL
PPL
PNK
PPL
INTERLOCK
RELAY
OVER RIDE
RELAY
BLK
DK GRN
LT GRN/
DK BLU/
BLK
LT GRN/
DK BLU/
BLK
LT GRN/
DK BLU/
BLK
BLK
BLK
PPL
STARTER
SOLENOID
BATTERY
STARTER
MOTOR
ELECTRONIC
MODULE

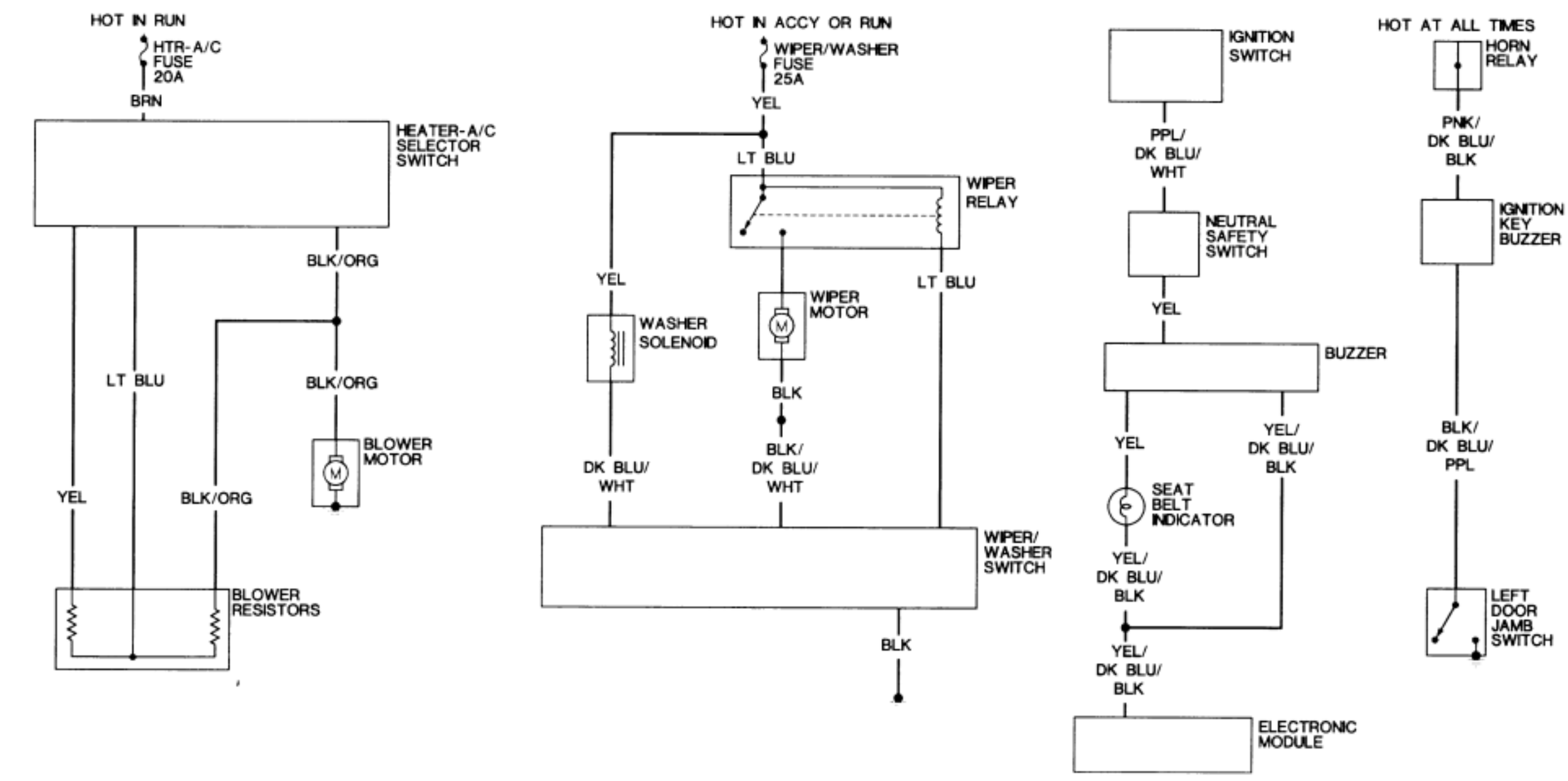
HOT IN RUN
HTR-A/C
FUSE
20A
BRN
HEATER-A/C
SELECTOR
SWITCH
BLK/ORG
LT BLU
BLK/ORG
BLOWER
MOTOR
YEL
BLK/ORG
BLOWER
RESISTORS
HOT IN ACCY OR RUN
WIPER/WASHER
FUSE
25A
YEL
LT BLU
WIPER
RELAY
YEL
LT BLU
WASHER
SOLENOID
WIPER
MOTOR
BLK
BLK/
DK BLU/
WHT
DK BLU/
WHT
WIPER/
WASHER
SWITCH
BLK
IGNITION
SWITCH
PPL/
DK BLU/
WHT
NEUTRAL
SAFETY
SWITCH
YEL
BUZZER
YEL
YEL/
DK BLU/
BLK
SEAT
BELT
INDICATOR
YEL/
DK BLU/
BLK
YEL/
DK BLU/
BLK
ELECTRONIC
MODULE
HOT AT ALL TIMES
HORN
RELAY
PNK/
DK BLU/
BLK
IGNITION
KEY
BUZZER
BLK/
DK BLU/
PPL
LEFT
DOOR
JAMB
SWITCH