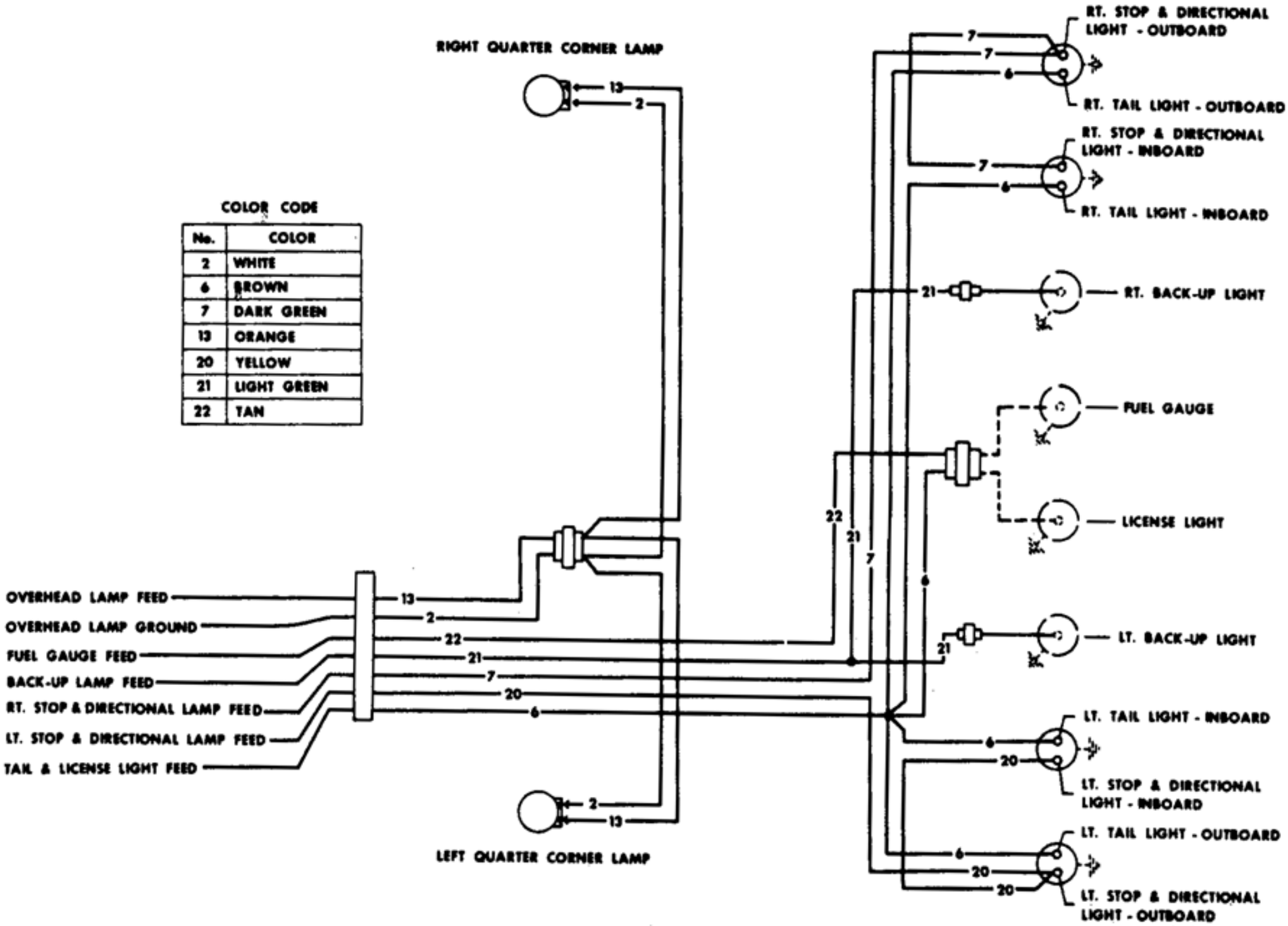

COLOR CODE

No.	COLOR
2	WHITE
6	BROWN
7	DARK GREEN
13	ORANGE
20	YELLOW
21	LIGHT GREEN
22	TAN

67 CAMARO RS .. BODY & REAR LIGHTING